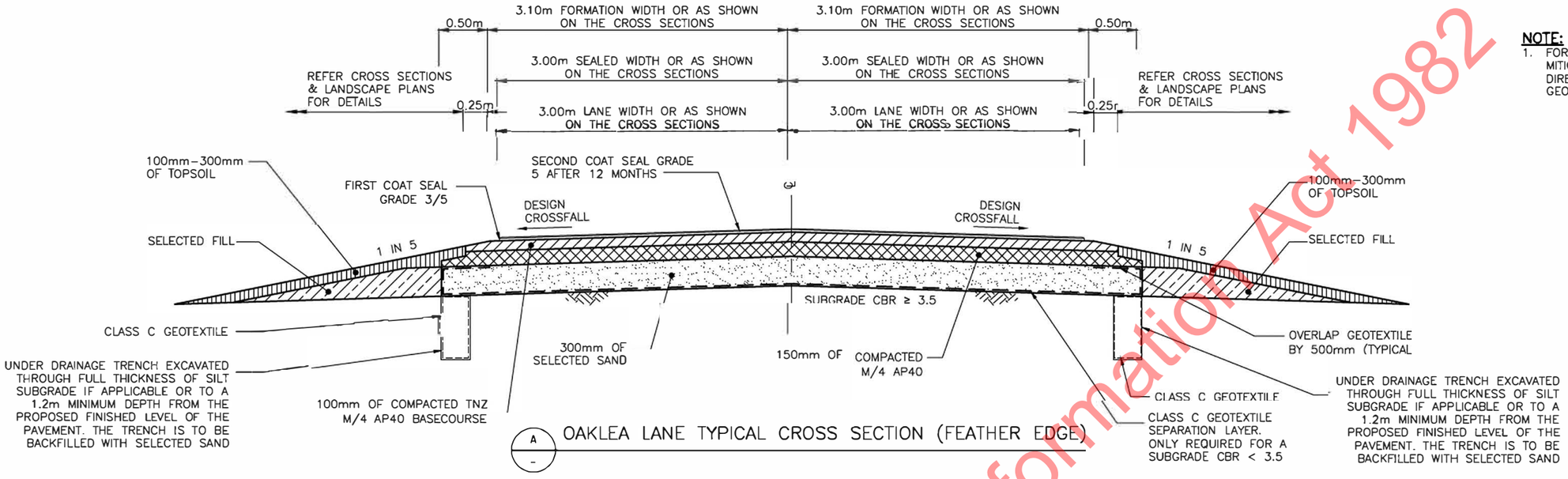

A – OAKLEA LANE TYPICAL CROSS SECTION (FEATHER EDGE)

NOTE:
1. FOR A SUBGRADE CBR < 3.5 MITIGATION TREATMENT TO BE DIRECTED BY THE GEOTECHNICAL DESIGNER.

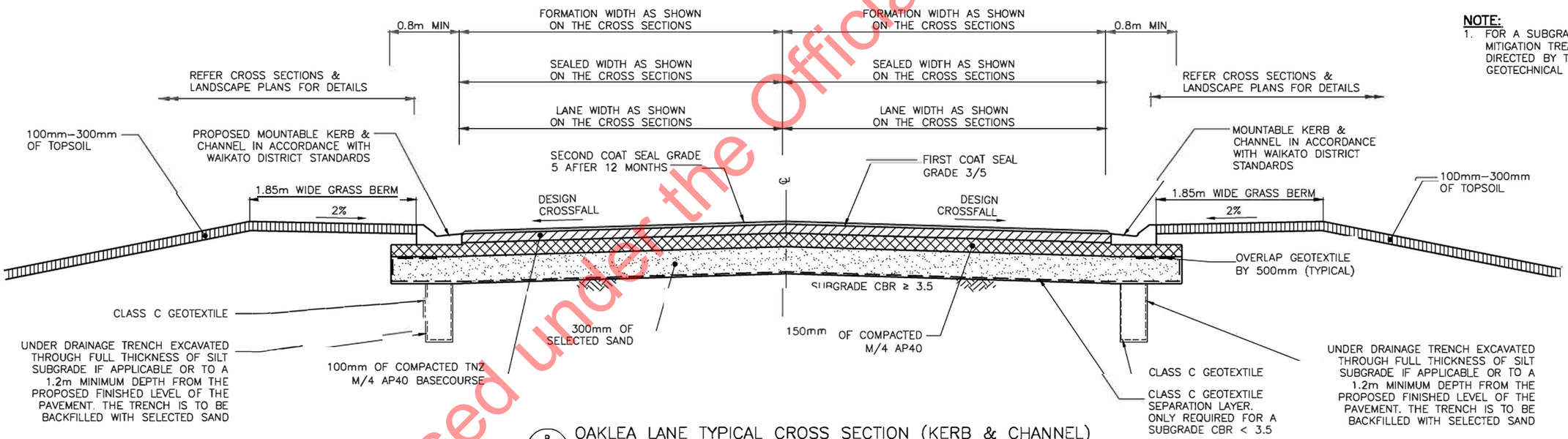

B – OAKLEA LANE TYPICAL CROSS SECTION (KERB & CHANNEL)

NOTE:
1. FOR A SUBGRADE CBR < 3.5 MITIGATION TREATMENT TO BE DIRECTED BY THE GEOTECHNICAL DESIGNER.

Approved for Issue
s 9(2)(a)

Rev	Revision Description	Drawn	Drawing Checked	Designed	Design Checked	Approved	Date
AB	AS–BUILT	s 9(2)(a)				s 9(2)(a)	11.12.15

U:\CAD\CAMBRIDGE–ASBUILT\2017–08\Dwgs \C–115–021–034.dwg

PRINTED BY: s 9(2)(a) 21–Aug–17 4:25 p.m.

Job 021
Scales 1:25 A1 1:50 A3
Original Size A1

HEB Construction | URS | TDG | Jasmax | GAIA ENGINEER | NZ TRANSPORT AGENCY WAKA KOTAHI

WAIKATO EXPRESSWAY: TAMAHERE TO CAMBRIDGE SECTION

LOCAL ROADS WAIKATO DC
TYPICAL CROSS SECTIONS
SHEET 1 OF 9

Status: **AS-BUILT**
Drawing Number: **C-115-021**
Revision: **AB**

This design is based on generally accepted practices and standards at the time it was prepared. No other warranty, expressed or implied, is made. It is prepared in accordance with the scope of work and for the purpose outlined in the contract dated 27 Sept 2012. No responsibility is accepted for use of any part of this design in any other context or for any other purpose. URS accepts no liability for the use of this drawing where it has been provided in electronic format, nor for any changes made to it following its issue. URS considers the printed version to be binding. A hard copy of this drawing is held on file by URS and may be provided if requested.

© Document copyright of HEB Construction Limited and its project consultants 2013 and may only be used for its intended purpose.

Released under the Official Information Act 1982

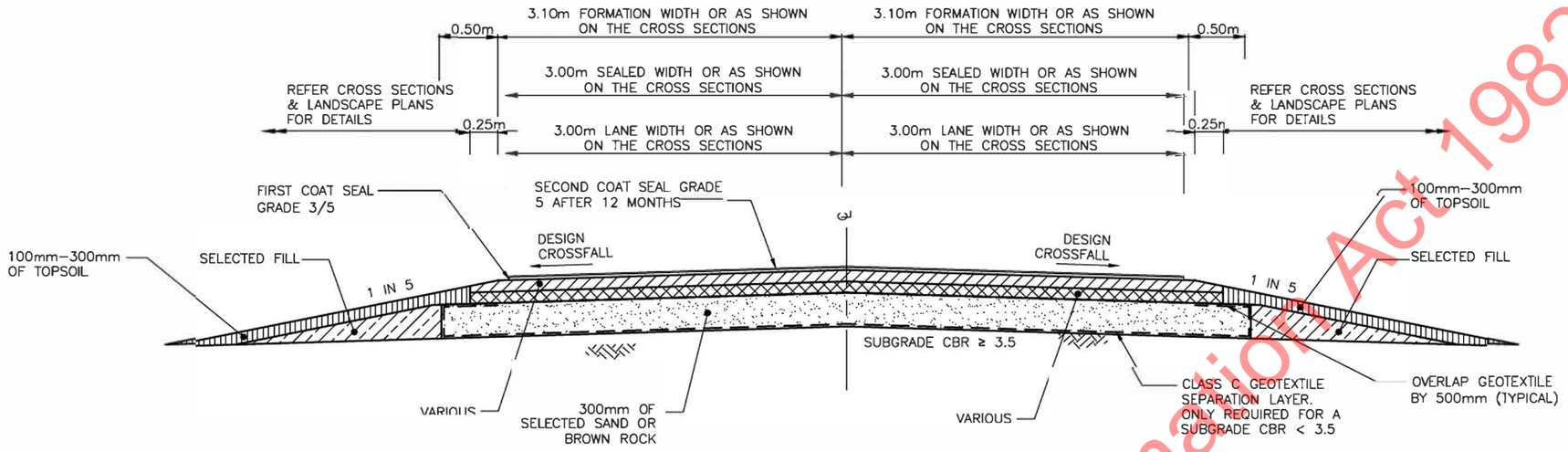

NOTE:
1. FOR A SUBGRADE CBR < 3.5 MITIGATION TREATMENT TO BE DIRECTED BY THE GEOTECHNICAL DESIGNER.
2. A SECTION OF AMBREED ROAD IS TO BE USED IN A PAVEMENT TRIAL FOR THE MAIN ALIGNMENT. PAVEMENT DETAILS FOR THE PAVEMENT TRIAL ARE TO BE IN ACCORDANCE WITH THE PAVEMENT TRIAL DRAWINGS.

C / - AMBREED ROAD ACCESS TYPICAL CROSS SECTION (FEATHER EDGE)

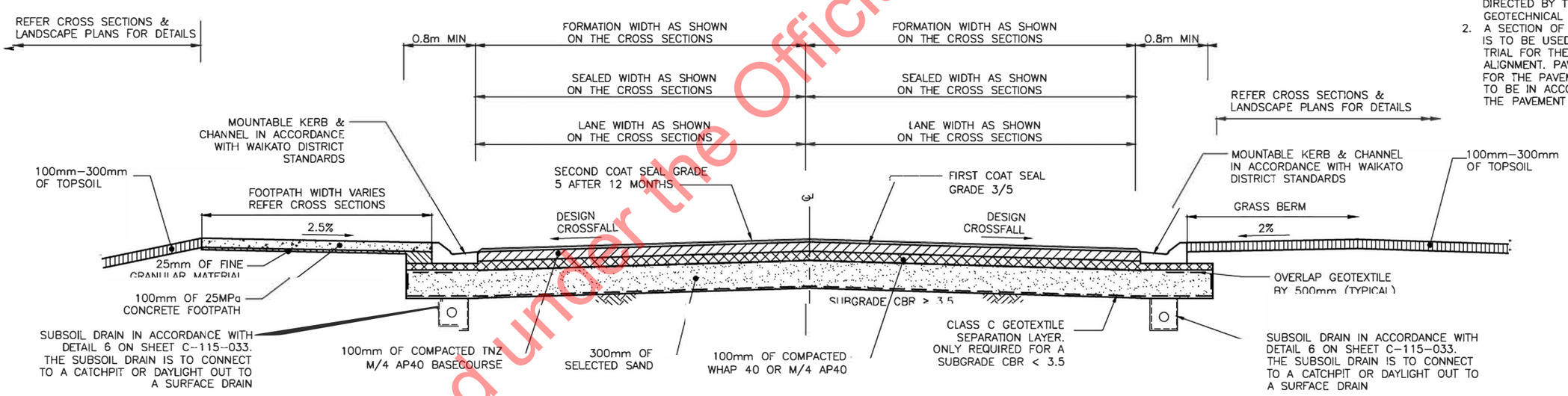

NOTE:
1. FOR A SUBGRADE CBR < 3.5 MITIGATION TREATMENT TO BE DIRECTED BY THE GEOTECHNICAL DESIGNER.
2. A SECTION OF AMBREED ROAD IS TO BE USED IN A PAVEMENT TRIAL FOR THE MAIN ALIGNMENT. PAVEMENT DETAILS FOR THE PAVEMENT TRIAL ARE TO BE IN ACCORDANCE WITH THE PAVEMENT TRIAL DRAWINGS.

D / - AMBREED ROAD ACCESS TYPICAL CROSS SECTION (KERB & CHANNEL)

This sign is based on generally accepted practices and standards at the time it was prepared. No other warranty, expressed or implied, is made. It is prepared in accordance with the scope of work and for the purpose outlined in the contract dated 27 Sept 2012. No responsibility is accepted for use of any part of this design in any other context or for any other purpose. URS accepts no liability for the use of this drawing where it has been provided in electronic format, nor for any changes made to it following its issue. URS considers the printed version to be binding. A hard copy of this drawing is held on file by URS and may be provided if requested.

Rev	Revision Description	Drawn	Drawing Checked	Designed	Design Checked	Approved	Date
AD	AS–BUILT	s 9(2)(a)				s 9(2)(a)	11.12.15

U:\CAD\CAMBRIDGE–ASBUILT\2017–08\Dwgs\C–115–021–034.dwg PRINTED BY: s 9(2)(a) 21–Aug–17 4:25 p.m.

Tab 022
Scales 1:25 A1
Original Size A1

HEB Construction | URS | TDG | Jasmax | GAIA ENGINEER | NZ TRANSPORT AGENCY WAKA KOTAHI

Approved for Issue: s 9(2)(a)

WAIKATO EXPRESSWAY: TAMAHERE TO CAMBRIDGE SECTION

LOCAL ROADS WAIKATO DC
TYPICAL CROSS SECTIONS
SHEET 2 OF 9

Status: AS-BUILT
Drawing Number: C-115-022
Revision: AB

© Document copyright of HEB Construction Limited and its project consultants 2013 and may only be used for its intended purpose.

Released under the Official Information Act 1982

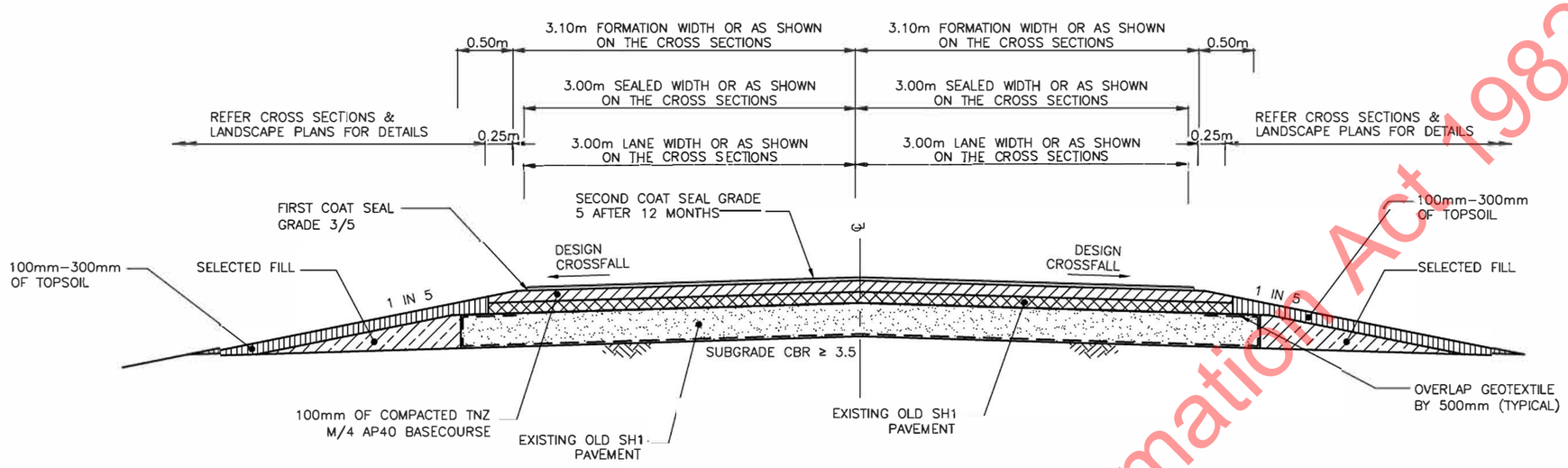

NOTE:
1. FOR A SUBGRADE CBR < 3.5 MITIGATION TREATMENT TO BE DIRECTED BY THE GEOTECHNICAL DESIGNER.

E - DUNCAN ROAD SOUTHERN ACCESS TYPICAL CROSS SECTION (FEATHER EDGE)

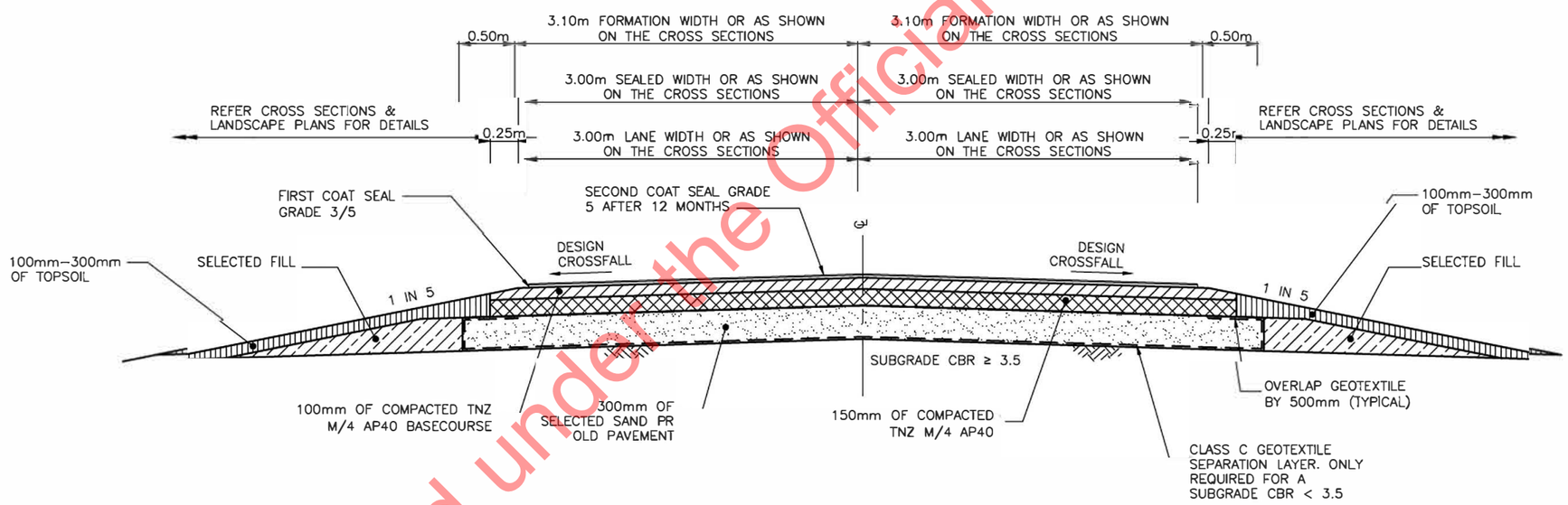

NOTE:
1. FOR A SUBGRADE CBR < 3.5 MITIGATION TREATMENT TO BE DIRECTED BY THE GEOTECHNICAL DESIGNER.

F - HAUTAPU ROAD TYPICAL CROSS SECTION (FEATHER EDGE)

CH:920–1520

This design is based on generally accepted practices and standards at the time it was prepared. No other warranty, expressed or implied, is made. It is prepared in accordance with the scope of work and for the purpose outlined in the contract dated 27 Sept 2012. No responsibility is accepted for use of any part of this design in any other context or for any other purpose. URS accepts no liability for the use of this drawing where it has been provided in electronic format, nor for any changes made to it following its issue. URS considers the printed version to be binding. A hard copy of this drawing is held on file by URS and may be provided if requested.

Approved for Issue: s 9(2)(a)

Rev	Revision Description	Drawn	Drawing Checked	Designed	Design Checked	Approved	Date
AB	AS-BUILT	s 9(2)(a)				s 9(2)(a)	11.12.15

Tab 023

Scales 1:25 A1 1:50 A3

Original Size A1

HEB Construction · URS · TDG · Jasmax · GAIA ENGINEER · NZ TRANSPORT AGENCY WAKA KOTAHI

WAIKATO EXPRESSWAY: TAMAHERE TO CAMBRIDGE SECTION

LOCAL ROADS WAIKATO DC
TYPICAL CROSS SECTIONS
SHEET 3 OF 9

Status: AS-BUILT

Drawing Number: C-115-023

Revision: AB

U:\CAD\CAMBRIDGE-ASBUILT\2017-08\Dwgs\C-115-021-034.dwg

PRINTED BY: s 9(2)(a) 21-Aug-17 4:25 p.m

© Document copyright of HEB Construction Limited and its project consultants 2013 and may only be used for its intended purpose.

Released under the Official Information Act 1982

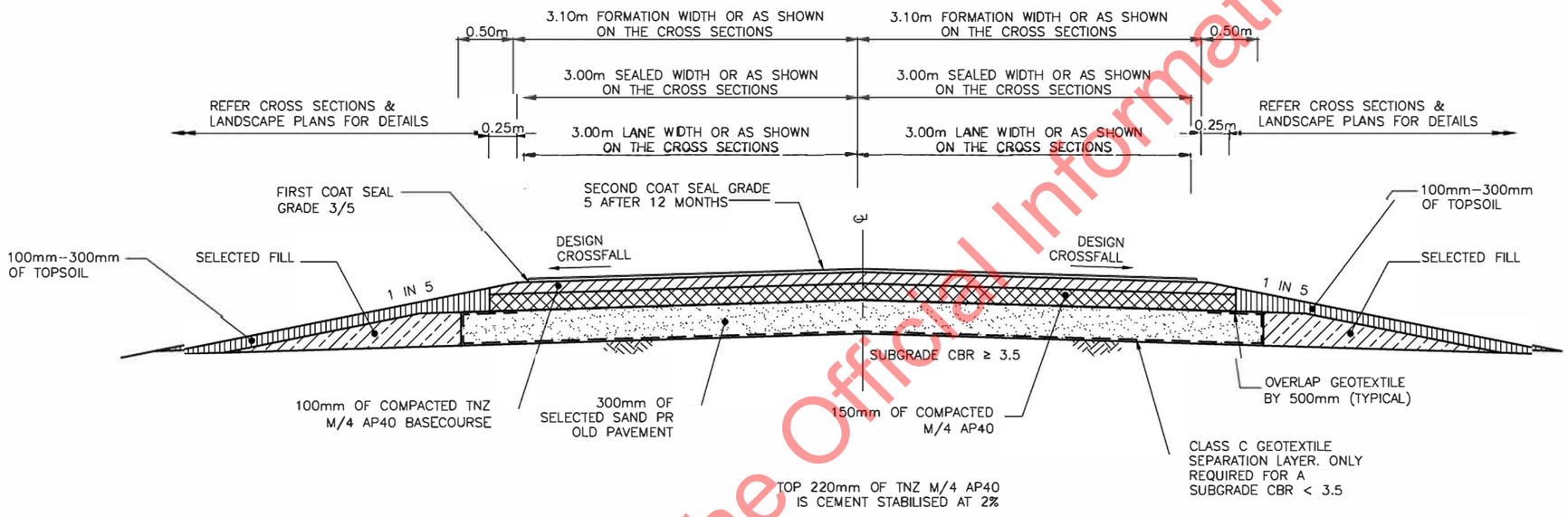

F

HAUTAPU ROAD TYPICAL CROSS SECTION (FEATHER EDGE)

CH:1520–1680

NOTE:

1. FOR A SUBGRADE CBR < 3.5 MITIGATION TREATMENT TO BE DIRECTED BY THE GEOTECHNICAL DESIGNER.

Approved for Issue

s 9(2)(a)

Rev	Revision Description	Drawn	Drawing Checked	Designed	Design Checked	Approved	Date
AB	AS–BUILT	s 9(2)(a)				s 9(2)(a)	11.12.15

U:\CAD\CAMBRIDGE–ASBUILT\2017–08\Dwgs\C–115–021–034.dwg

PRINTED BY: s 9(2)(a) 21–Aug–17 4:25 p.m.

Tab 023A

Scales 1:25 A1 1:50 A3

Original Size A1

HEB Construction | URS | TDG | Jasmax | GAIA ENGINEER | NZ TRANSPORT AGENCY WAKA KOTAHI

WAIKATO EXPRESSWAY: TAMAHERE TO CAMBRIDGE SECTION

LOCAL ROADS WAIKATO DC
TYPICAL CROSS SECTIONS
SHEET 4 OF 9

Status: AS-BUILT

Drawing Number: C-115-023A

Revision: AB

This design is based on generally accepted practices and standards at the time it was prepared. No other warranty, expressed or implied, is made. It is prepared in accordance with the scope of work and for the purpose outlined in the contract dated 27 Sept 2012. No responsibility is accepted for use of any part of this design in any other context or for any other purpose. URS accepts no liability for the use of this drawing where it has been provided in electronic format, nor for any changes made to it following its issue. URS considers the printed version to be binding. A hard copy of this drawing is held on file by URS and may be provided if requested.

© Document copyright of HEB Construction Limited and its project consultants 2013 and may only be used for its intended purpose.

Released under the Official Information Act 1982

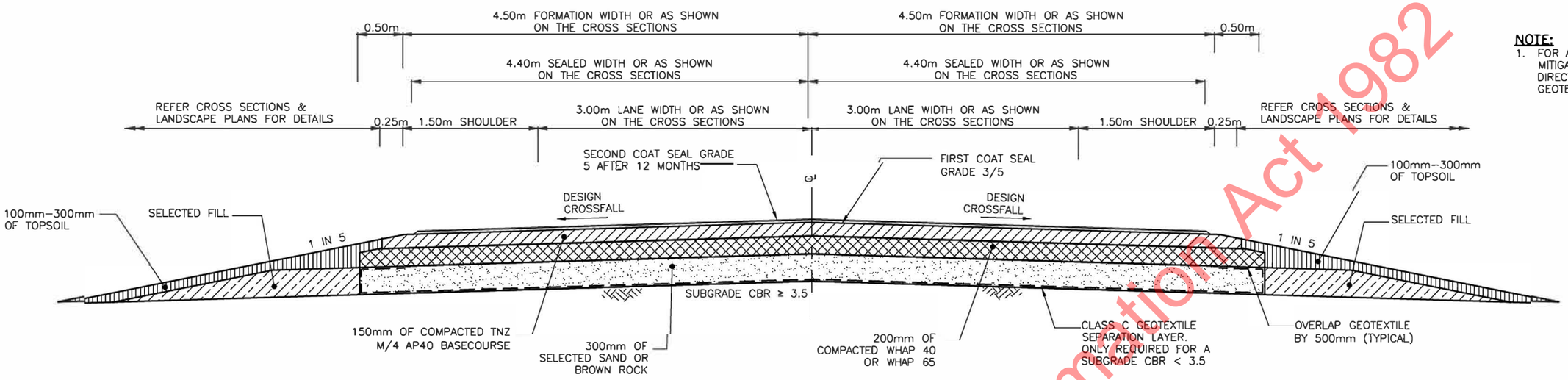

NOTE:
1. FOR A SUBGRADE CBR < 3.5 MITIGATION TREATMENT TO BE DIRECTED BY THE GEOTECHNICAL DESIGNER.

G – PENCARROW ROAD TYPICAL CROSS SECTION (NEW PAVEMENT)

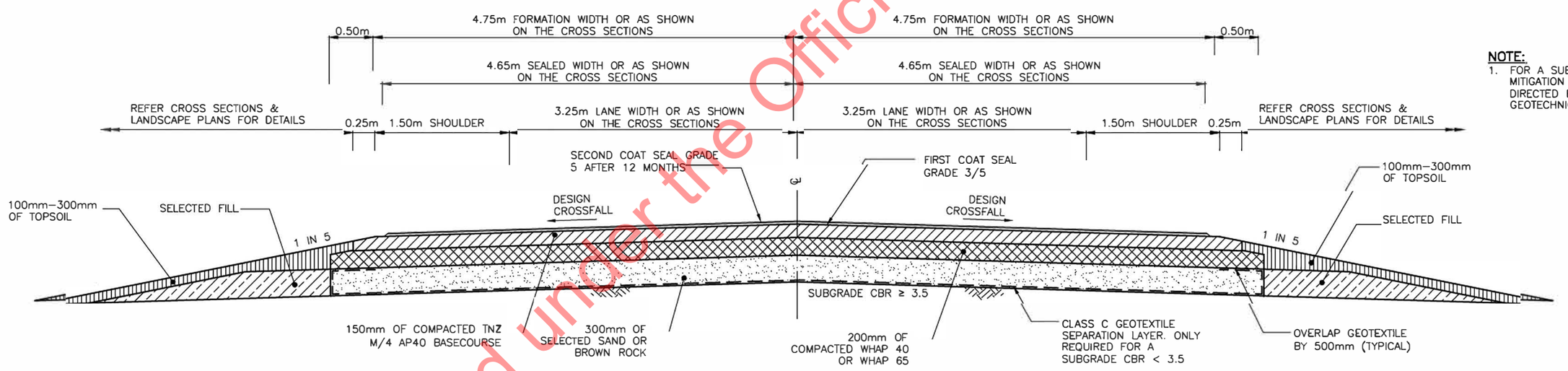

NOTE:
1. FOR A SUBGRADE CBR < 3.5 MITIGATION TREATMENT TO BE DIRECTED BY THE GEOTECHNICAL DESIGNER.

H – TAMAHERE DRIVE TYPICAL CROSS SECTION (NEW PAVEMENT)

Approved for Issue
s 9(2)(a)

Rev	Revision Description	Drawn	Drawing Checked	Designed	Design Checked	Approved	Date
AB	AS-BUILT	s 9(2)(a)				s 9(2)(a)	11.12.15

U:\CAD\CAMBRIDGE-ASBUILT\2017-08\Dwgs\C-115-021-034.dwg

PRINTED BY: s 9(2)(a) 21-Aug-17 4:25 p.m.

Tab 024
Scales 1:25 A1 1:50 A3
Original Size A1

HEB Construction | URS | TDG | Jasmax | GAIA ENGINEER | NZ TRANSPORT AGENCY WAKA KOTAHI

WAIKATO EXPRESSWAY: TAMAHERE TO CAMBRIDGE SECTION

LOCAL ROADS WAIKATO DC
TYPICAL CROSS SECTIONS
SHEET 5 OF 9

Status: **AS-BUILT**
Drawing Number: **C-115-024**
Revision: **AB**

This design is based on generally accepted practices and standards at the time it was prepared. No other warranty, expressed or implied, is made. It is prepared in accordance with the scope of work and for the purpose outlined in the contract dated 27 Sept 2012. No responsibility is accepted for use of any part of this design in any other context or for any other purpose. URS accepts no liability for the use of this drawing where it has been provided in electronic format, nor for any changes made to it following its issue. URS considers the printed version to be binding. A hard copy of this drawing is held on file by URS and may be provided if requested.

© Document copyright of HEB Construction Limited and its project consultants 2013 and may only be used for its intended purpose.

Released under the Official Information Act 1982

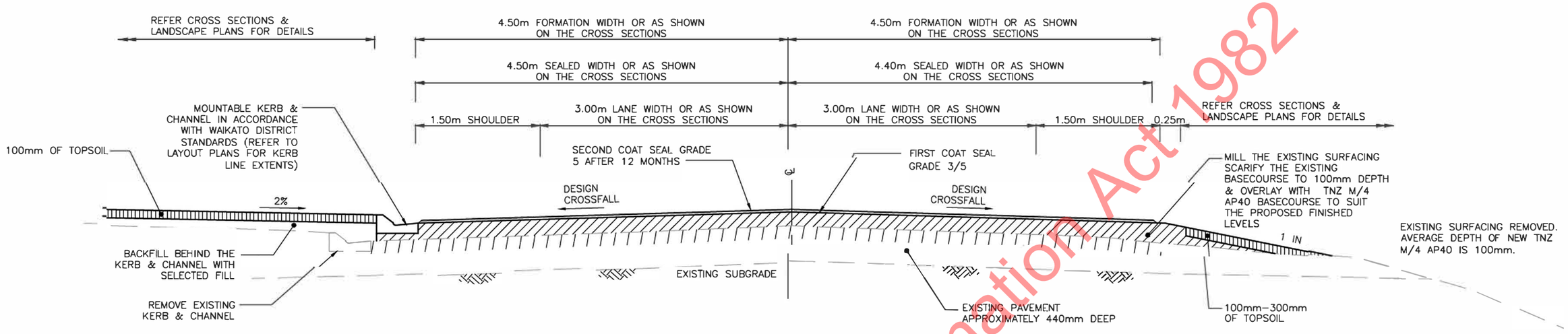

1 / - PENCARROW ROAD TYPICAL CROSS SECTION (OVERLAY EXISTING PAVEMENT)

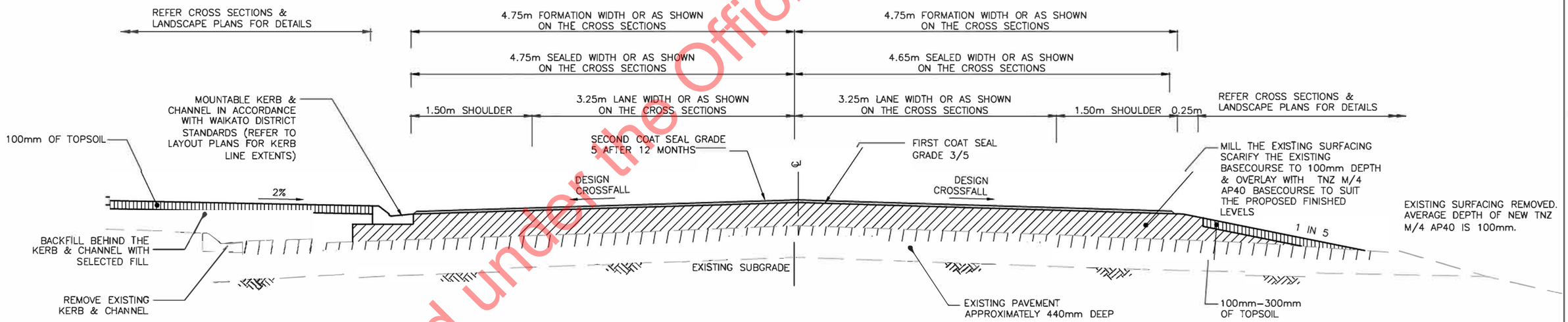

1 / - TAMAHERE DRIVE TYPICAL CROSS SECTION (OVERLAY EXISTING PAVEMENT)

This design is based on generally accepted practices and standards at the time it was prepared. No other warranty, expressed or implied, is made. It is prepared in accordance with the scope of work and for the purpose outlined in the contract dated 27 Sept 2012. No responsibility is accepted for use of any part of this design in any other context or for any other purpose. URS accepts no liability for the use of this drawing where it has been provided in electronic format, nor for any changes made to it following its issue. URS considers the printed version to be binding. A hard copy of this drawing is held on file by URS and may be provided if requested.

Rev	Revision Description	Drawn	Drawing Checked	Designed	Design Checked	Approved	Date
AB	AS-BUILT	s 9(2)(a)				s 9(2)(a)	11.12.15

U:\CAD\CAMBRIDGE-ASBUILT\2017-08\Dwgs\C-115-021-034.dwg

PRINTED BY: s 9(2)(a) 21-Aug-17 4:25 p.m.

Tab 025

Scales 1:25 A1 1:50 A3

Original Size A1

HEB Construction | URS | TDG | Jasmax | GAIA ENGINEER | NZ TRANSPORT AGENCY WAKA KOTAHI

Approved for Issue s 9(2)(a)

WAIKATO EXPRESSWAY: TAMAHERE TO CAMBRIDGE SECTION

LOCAL ROADS WAIKATO DC
TYPICAL CROSS SECTIONS
SHEET 6 OF 9

Status **AS-BUILT**

Drawing Number **C-115-025**

Revision **AB**

© Document copyright of HEB Construction Limited and its project consultants 2013 and may only be used for its intended purpose.

Released under the Official Information Act 1982

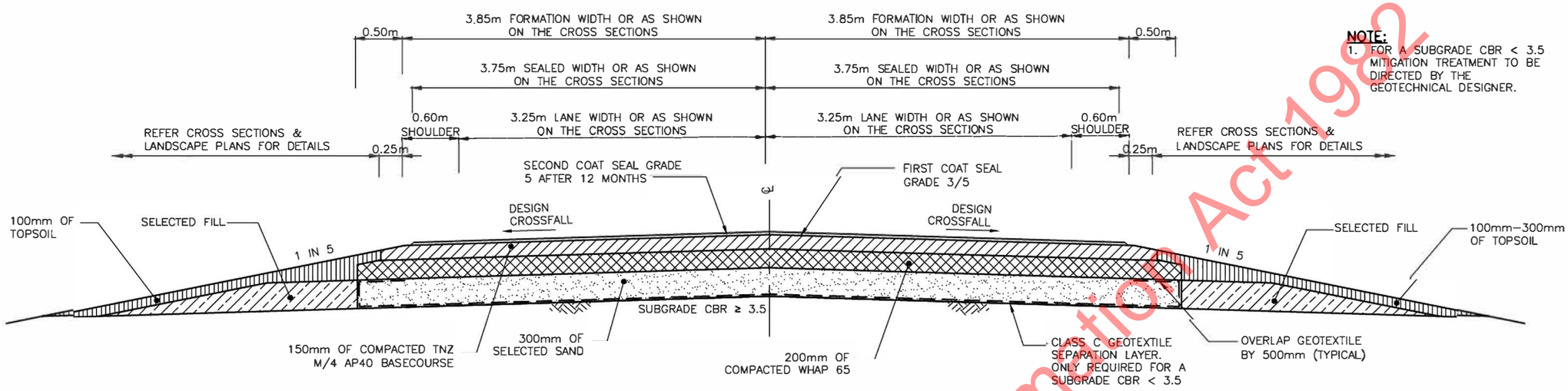

NOTE:
1. FOR A SUBGRADE CBR < 3.5 MITIGATION TREATMENT TO BE DIRECTED BY THE GEOTECHNICAL DESIGNER.

K / - PICKERING ROAD TYPICAL CROSS SECTION (NORTH & EAST OF ROUNDABOUT)

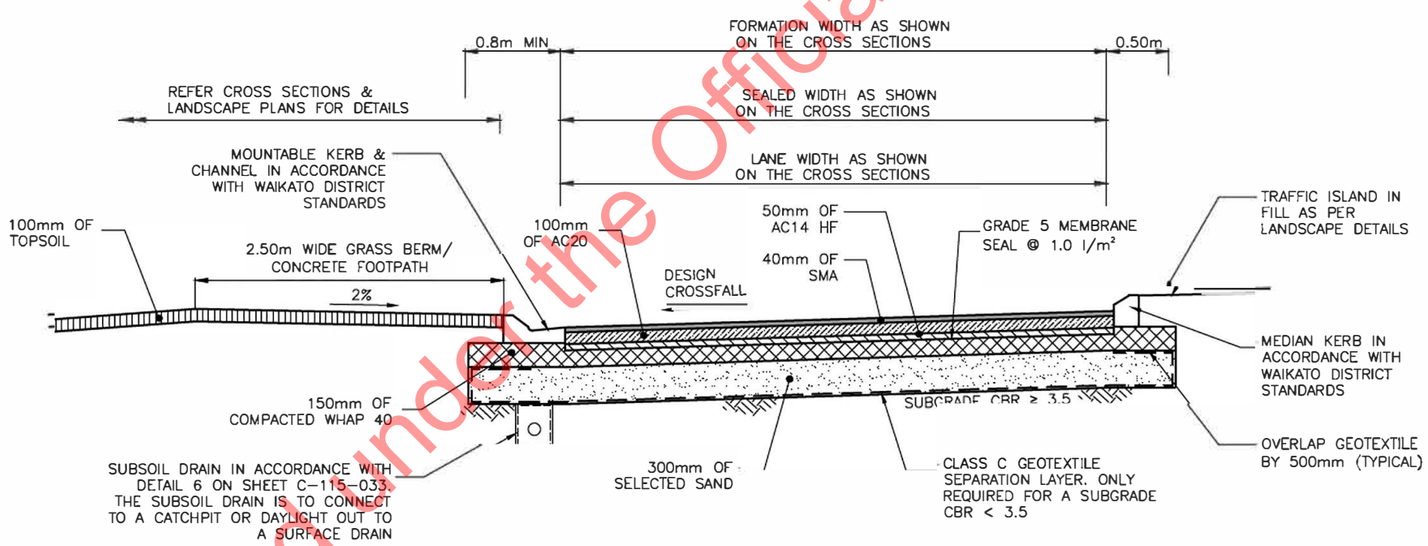

NOTE:
1. A TACK COAT IS TO BE APPLIED BETWEEN THE AC14HF & AC20 AT AN APPLICATION RATE OF 0.3 l/m².
2. A TACK COAT IS TO BE APPLIED BETWEEN THE AC20 & SMA10 AT AN APPLICATION RATE OF 0.3 l/m².
3. SUBSOIL DRAINS ARE TO BE PROVIDED WITH A STANDARD PROPRIETARY PRECAST CONCRETE HEADWALL AT THE OUTLET WHEN OUTFALLING TO A SWALE DRAIN

L / - PICKERING ROAD TYPICAL CROSS SECTION (ROUNDABOUT)

Approved for Issue
s 9(2)(a)

Rev	Revision Description	Drawn	Drawing Checked	Designed	Design Checked	Approved	Date
AB	AS–BUILT	s 9(2)(a)				s 9(2)(a)	11.12.15

Tab 026
Scales 1:25 A1 1:50 A3
Original Size A1

HEB Construction · URS · TDG · Jasmax · GAIA ENGINEER · NZ TRANSPORT AGENCY WAKA KOTAHI

WAIKATO EXPRESSWAY: TAMAHERE TO CAMBRIDGE SECTION

LOCAL ROADS WAIKATO DC
TYPICAL CROSS SECTIONS
SHEET 7 OF 9

Status: AS-BUILT
Drawing Number: C-115-026
Revision: AB

U:\CAD\CAMBRIDGE–ASBUILT\2017–08\Dwgs\C–115–021–034.dwg PRINTED BY: s 9(2)(a)

This design is based on generally accepted practices and standards at the time it was prepared. No other warranty, expressed or implied, is made. It is prepared in accordance with the scope of work and for the purpose outlined in the contract dated 27 Sept 2012. No responsibility is accepted for use of any part of this design in any other context or for any other purpose. URS accepts no liability for the use of this drawing where it has been provided in electronic format, nor for any changes made to it following its issue. URS considers the printed version to be binding. A hard copy of this drawing is held on file by URS and may be provided if requested.

© Document copyright of HEB Construction Limited and its project consultants 2013 and may only be used for its intended purpose.

Released under the Official Information Act 1982

NOTE:

1. FOR A SUBGRADE CBR < 3.5 MITIGATION TREATMENT TO BE DIRECTED BY THE GEOTECHNICAL DESIGNER.
2. SUBSOIL DRAINS ARE TO BE PROVIDED WITH A STANDARD PROPRIETARY PRECAST CONCRETE HEADWALL AT THE OUTLET WHEN OUTFALLING TO A SWALE DRAIN

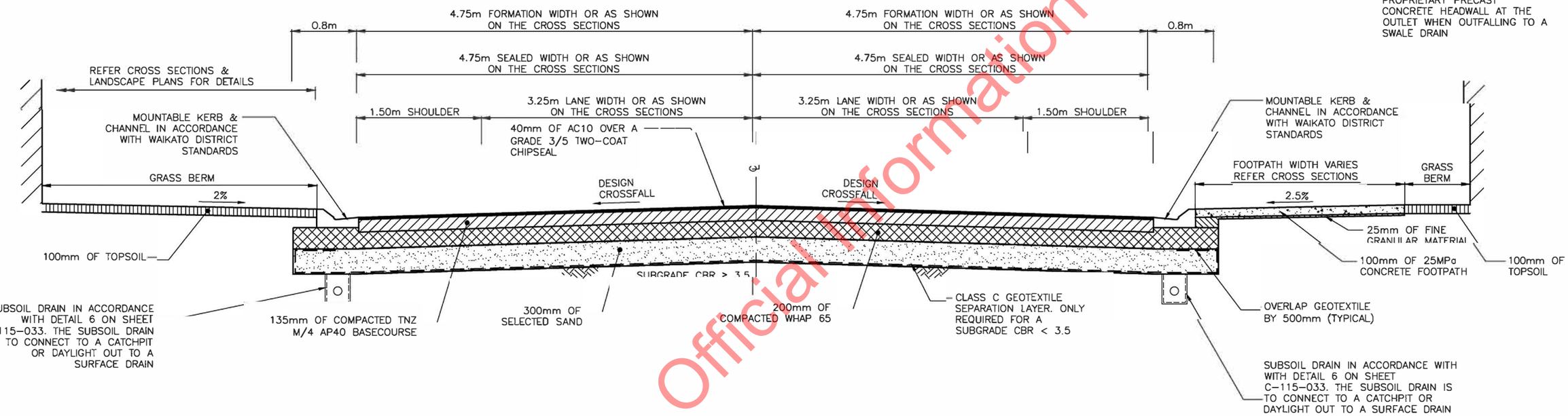

M / -

PICKERING ROAD TYPICAL CROSS SECTION (UNDER EXPRESSWAY)

ALSO TAMAHERE DRIVE INTERSECTION CH:668–721

Released under the Official Information Act 1982

Approved for Issue

s 9(2)(a)

Rev	Revision Description	Drawn	Drawing Checked	Designed	Design Checked	Approved	Date
AB	AS–BUILT	s 9(2)(a)				s 9(2)(a)	11.12.15

Tab 027

Scales 1:25 A1 1:50 A3

Original Size A1

HEB Construction | URS | TDG | Jasmax | GAIA ENGINEERS | NZ TRANSPORT AGENCY WAKA KOTAHI

WAIKATO EXPRESSWAY: TAMAHERE TO CAMBRIDGE SECTION

LOCAL ROADS WAIKATO DC
TYPICAL CROSS SECTIONS
SHEET 8 OF 9

Status: AS-BUILT

Drawing Number: C-115-027

Revision: AB

U:\CAD\CAMBRIDGE–ASBUILT\2017–08\Dwgs\C–115–021–034.dwg

PRINTED BY: s 9(2)(a) 21–Aug–17 4:25 p.m.

This design is based on generally accepted practices and standards at the time it was prepared. No other warranty, expressed or implied, is made. It is prepared in accordance with the scope of work and for the purpose outlined in the contract dated 27 Sept 2012. No responsibility is accepted for use of any part of this design in any other context or for any other purpose. URS accepts no liability for the use of this drawing where it has been provided in electronic format, nor for any changes made to it following its issue. URS considers the printed version to be binding. A hard copy of this drawing is held on file by URS and may be provided if requested.

© Document copyright of HEB Construction Limited and its project consultants 2013 and may only be used for its intended purpose.

NOTE:

1. FOR A SUBGRADE CBR < 3.5 MITIGATION TREATMENT TO BE DIRECTED BY THE GEOTECHNICAL DESIGNER.
2. SUBSOIL DRAINS ARE TO BE PROVIDED WITH A STANDARD PROPRIETARY PRECAST CONCRETE HEADWALL AT THE OUTLET WHEN OUTFALLING TO A SWALE DRAIN

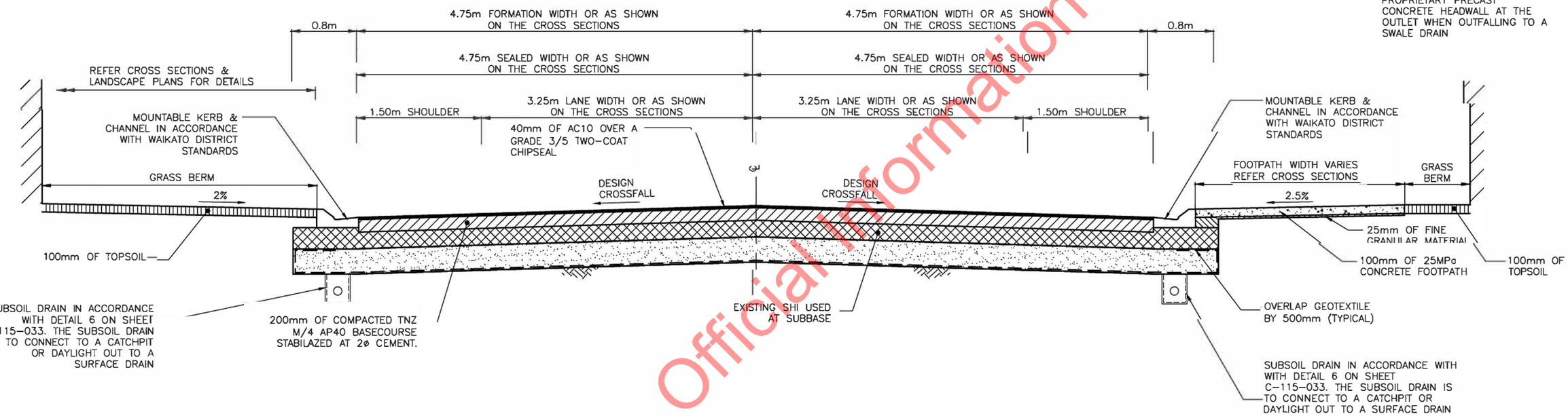

M / -

PICKERING ROAD TYPICAL CROSS SECTION AND TAMAHERE INTERSECTION

Released under the Official Information Act 1982

Approved for Issue: s 9(2)(a)

Rev	Revision Description	Drawn	Drawing Checked	Designed	Design Checked	Approved	Date
AB	AS-BUILT	s 9(2)(a)				s 9(2)(a)	11.12.15

Tab: 027-1

Scales: 1:25 A1, 1:50 A3

Original Size: A1

HEB Construction | URS | TDG | Jasmax | GAIA INGENIUM | NZ TRANSPORT AGENCY WAKA KOTAHI

WAIKATO EXPRESSWAY: TAMAHERE TO CAMBRIDGE SECTION

LOCAL ROADS WAIKATO DC
TYPICAL CROSS SECTIONS
SHEET 8 OF 9

Status: **AS-BUILT**

Drawing Number: **C-115-027-1**

Revision: **AB**

U:\CAD\CAMBRIDGE-ASBUILT\2017-08\Dwgs\C-115-021-034.dwg

PRINTED BY: s 9(2)(a) 21-Aug-17 4:25 p.m.

This design is based on generally accepted practices and standards at the time it was prepared. No other warranty, expressed or implied, is made. It is prepared in accordance with the scope of work and for the purpose outlined in the contract dated 27 Sept 2012. No responsibility is accepted for use of any part of this design in any other context or for any other purpose. URS accepts no liability for the use of this drawing where it has been provided in electronic format, nor for any changes made to it following its issue. URS considers the printed version to be binding. A hard copy of this drawing is held on file by URS and may be provided if requested.

© Document copyright of HEB Construction Limited and its project consultants 2013 and may only be used for its intended purpose.

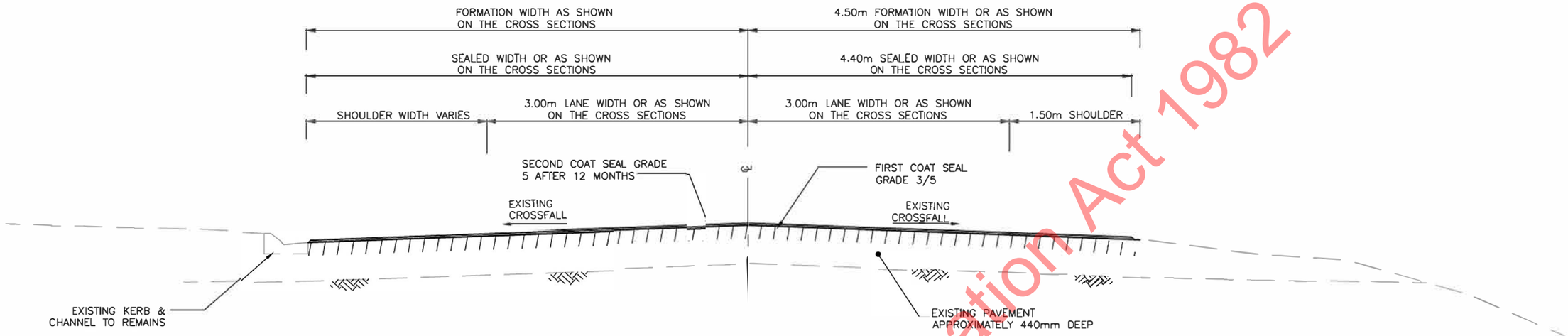

V - PENCARROW ROAD TYPICAL CROSS SECTION (RESEAL EXISTING PAVEMENT)

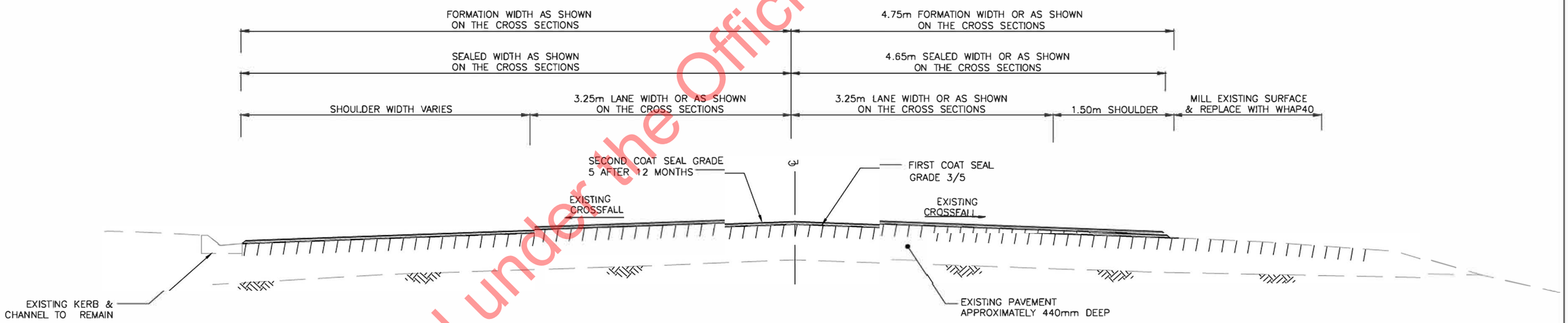

W - TAMAHERE DRIVE TYPICAL CROSS SECTION (RESEAL EXISTING PAVEMENT)

Approved for Issue
s 9(2)(a)

Rev	Revision Description	Drawn	Drawing Checked	Designed	Design Checked	Approved	Date
AB	AS-BUILT	s 9(2)(a)				s 9(2)(a)	11.12.15

U:\CAD\CAMBRIDGE-ASBUILT\2017-08\Dwgs\C-115-021-034.dwg

PRINTED BY: s 9(2)(a) 21-Aug-17 4:25 p.m.

Tab 034
Scales 1:25 A1 1:50 A3
Original Size A1

HEB Construction | URS | TDG | Jasmax | GAIA ENGINEER | NZ TRANSPORT AGENCY WAKA KOTAHI

WAIKATO EXPRESSWAY: TAMAHERE TO CAMBRIDGE SECTION

LOCAL ROADS WAIKATO DC
TYPICAL CROSS SECTIONS
SHEET 9 OF 9

Status: **AS-BUILT**
Drawing Number: **C-115-034**
Revision: **AB**

This design is based on generally accepted practices and standards at the time was prepared. No other warranty, expressed or implied, is made. It is prepared in accordance with the scope of work and for the purpose outlined in the contract dated 27 Sept 2012. No responsibility is accepted for use of any part of this design in any other context or for any other purpose. URS accepts no liability for the use of this drawing where it has been provided in electronic format, nor for any changes made to it following its issue. URS considers the printed version to be binding. A hard copy of this drawing is held on file by URS and may be provided if requested.

© Document copyright of HEB Construction Limited and its project consultants 2013 and may only be used for its intended purpose.

Released under the Official Information Act 1982